Electrolux PROFESSIONAL

Modular Cooking Range Line 900XP Two Wells Electric Fryer 15 liter

ITEM #

MODEL #

NAME #

SIS #

AIA #



391088 (E9FREH2GF0) 15+15-lt electric Fryer with 2 "V" shaped wells (external heating elements), 2 baskets and lids included

Short Form Specification

Item No.

High efficiency infrared heating elements (20kW) attached to the outside of the wells. Deep drawn V-Shaped wells. Oil drains through a tap into a container positioned under the wells. Height adjustable feet in stainless steel. Exterior panels in stainless steel. Worktop in 20/10, stainless steel. Right-angled side edges eliminate gaps and possible dirt traps between units.

Main Features

- Deep drawn V-Shaped wells.
- Interior of wells with seamlessly laser-welded corners for ease of cleaning.
- External infrared heating elements for ease of cleaning of internal well.
- Thermostatic regulation of oil temperature up to a maximum of 185 °C.
- Overheat protection thermostat as standard on all units.
- Oil drains through a tap into a drainage container positioned under the well.
- All major compartments located in front of unit for ease of maintenance.
- The special design of the control knob system guarantees against water infiltration.
- Unit delivered with four 50 mm legs in stainless steel as standard (all round Stainless steel kick plates as option).
- Supplied as standard with 2 baskets and 1 right and left side doors for cupboard.
- Optional portable oil quality monitoring tool (code 9B8081) for efficient oil management.

Construction

- Unit is 930 mm deep to give a larger working surface area.
- All exterior panels in Stainless Steel with Scotch Brite finishing.
- Model has right-angled side edges to allow flush fitting joints between units, eliminating gaps and possible dirt traps.
- IPX5 water resistance certification.

Sustainability

- This model is compliant with Swiss Energy Efficiency Ordinance (730.02).

Included Accessories

- 2 of Door for open base cupboard PNC 206350
- 2 of 1 full size basket for 14/15lt fryers PNC 921691

Optional Accessories

- Junction sealing kit PNC 206086 ❑
- Kit 4 wheels - 2 swivelling with brake - it is mandatory to install Base support and wheels PNC 206135 ❑
- Flanged feet kit PNC 206136 ❑
- Frontal kicking strip for concrete installation, 800mm PNC 206148 ❑

APPROVAL:

• Frontal kicking strip for concrete installation, 1000mm	PNC 206150	❑
• Frontal kicking strip for concrete installation, 1200mm	PNC 206151	❑
• Frontal kicking strip for concrete installation, 1600mm	PNC 206152	❑
• Pair of side kicking strips for concrete installation	PNC 206157	❑
• Frontal kicking strip, 800mm (not for refr-freezer base)	PNC 206176	❑
• Frontal kicking strip, 1000mm (not for refr-freezer base)	PNC 206177	❑
• Frontal kicking strip, 1200mm (not for refr-freezer base)	PNC 206178	❑
• Frontal kicking strip, 1600mm (not for refr-freezer base)	PNC 206179	❑
• Pair of side kicking strips (not for refr-freezer base)	PNC 206180	❑
• 2 panels for service duct for single installation	PNC 206181	❑
• 2 panels for service duct for back to back installation	PNC 206202	❑
• Kit 4 feet for concrete installation (not for 900 line free standing grill)	PNC 206210	❑
• Sediment tray for 15lt fryers	PNC 206235	❑
• Oil drain pipe for 15lt free standing fryer	PNC 206301	❑
• Chimney upstand, 800mm	PNC 206304	❑
• Back handrail 800 mm	PNC 206308	❑
• Back handrail 1200 mm	PNC 206309	❑
• Door for open base cupboard	PNC 206350	❑
• Base support for feet or wheels - 800mm (700/900)	PNC 206367	❑
• Base support for feet or wheels - 1200mm (700/900)	PNC 206368	❑
• Base support for feet or wheels - 1600mm (700/900)	PNC 206369	❑
• Base support for feet or wheels - 2000mm (700/900)	PNC 206370	❑
• Rear paneling - 800mm (700/900)	PNC 206374	❑
• Rear paneling - 1000mm (700/900)	PNC 206375	❑
• Rear paneling - 1200mm (700/900)	PNC 206376	❑
• Chimney grid net, 400mm (700XP/900)	PNC 206400	❑
• 2 side covering panels for free standing appliances	PNC 216134	❑
• 1 full size basket for 14/15lt fryers	PNC 921691	❑
• 2 half size baskets for 14/15lt fryers	PNC 921692	❑
• Filter for fryer oil collection basin for 7lt, 14lt, 15lt free standing fryers	PNC 921693	❑
• Unclogging rod for 15lt fryers drainage pipe	PNC 921695	❑
• Deflector for floured products for 15lt fryers	PNC 921696	❑

The company reserves the right to make modifications to the products without prior notice. All information correct at time of printing.

Modular Cooking Range Line 900XP Two Wells Electric Fryer 15 liter

Front

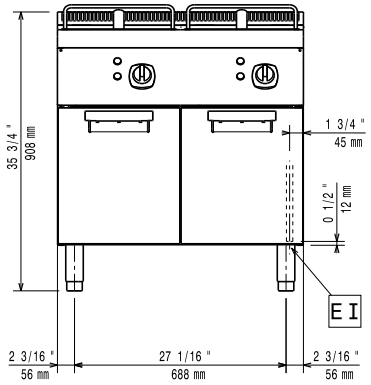

Side

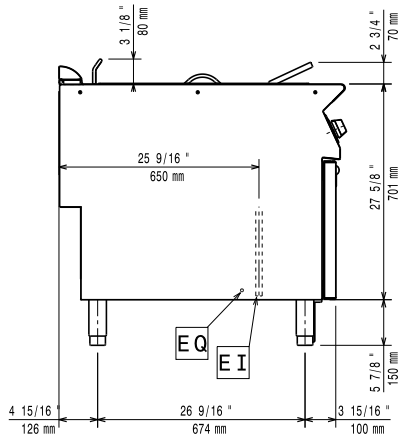

EI = Electrical inlet (power)
EQ = Equipotential screw

Top

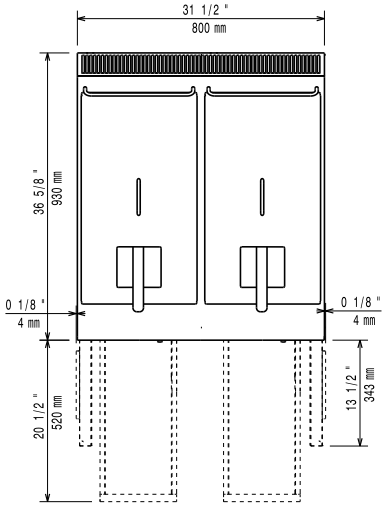

Electric

Supply voltage:	380-400 V/3N ph/50-60 Hz
Total Watts:	20 kW

Key Information:

Usable well dimensions (width):	240 mm
Usable well dimensions (height):	505 mm
Usable well dimensions (depth):	380 mm
Well capacity:	13 lt MIN; 15 lt MAX
Thermostat Range:	105 °C MIN; 185 °C MAX
Net weight:	86 kg
Shipping weight:	99 kg
Shipping height:	1080 mm
Shipping width:	1020 mm
Shipping depth:	880 mm
Shipping volume:	0.97 m³
[NOT TRANSLATED]	EFE92M15

If appliance is set up or next to or against temperature sensitive furniture or similar, a safety gap of approximately 150 mm should be maintained or some form of heat insulation fitted.

The company reserves the right to make modifications to the products without prior notice. All information correct at time of printing.

2026.11.20